Stone Forest Products

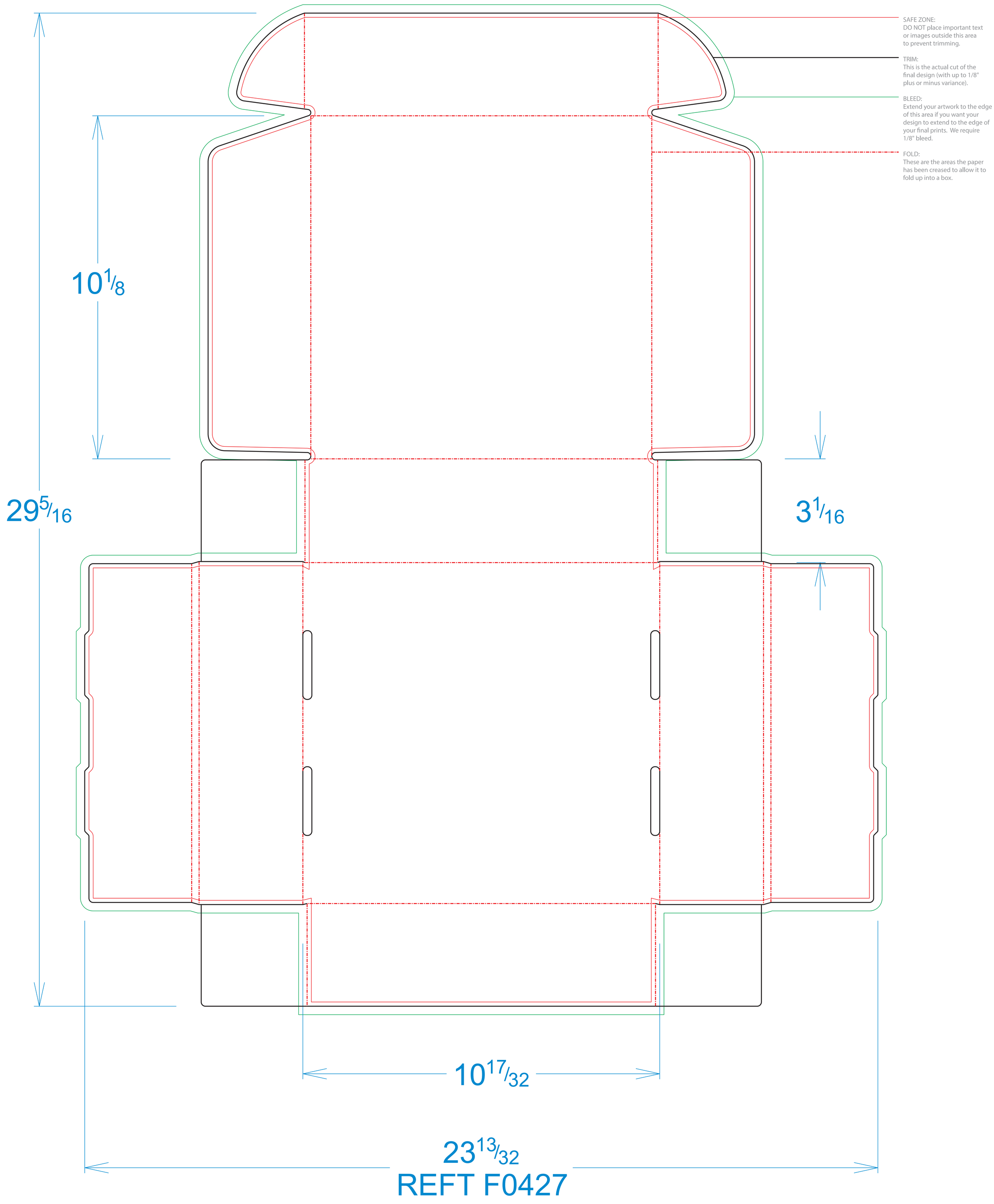

REFT F0427

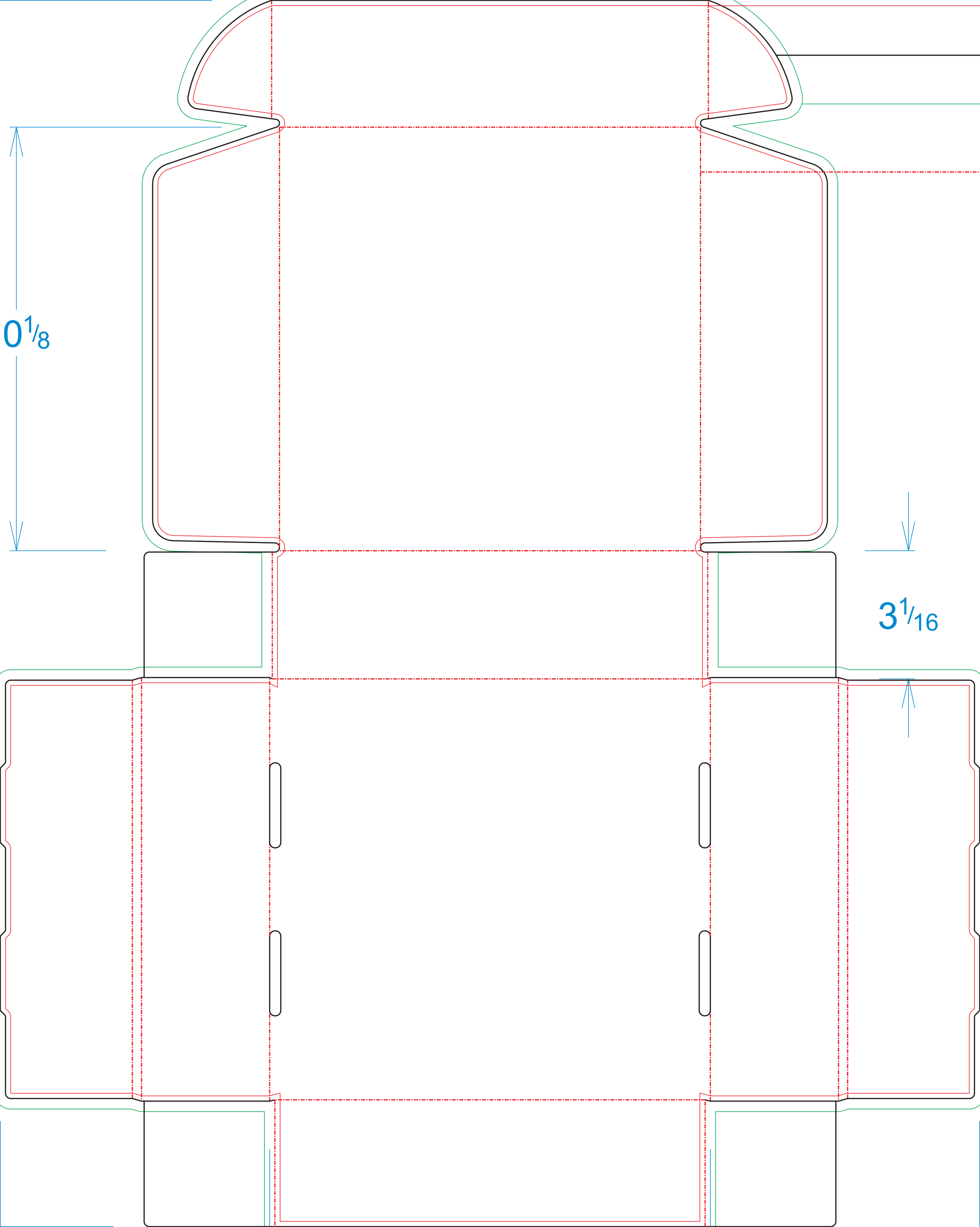
0 1/8
3 1/16